T7413A / VF20 / WPF20

IMMERSION TEMPERATURE SENSOR

PRODUCT DATA

GENERAL

These Immersion temperature sensors are used in the following hot or cold water control systems

- Excel 5000
- MicroniK 200
- MicroniK 100
- Excel Classic
- Excel Plus
- High Performance Excel Plus
- Excel EMC

or other systems using PT1000 or NTC20kΩ temperature sensing elements.

The sensors with a stainless steel immersion well are also suitable for registering domestic water temperature.

The WPF20 are mean value sensors, for establishing the mean value using two sensors.

FEATURES

- **PT1000 or NTC20kΩ temperature sensing element**
- **Wide sensing range**
- **High accuracy**
- **Choice of two different immersion well lengths**

SPECIFICATION

Nominal value	
PT1000	1000 Ω at 0 °C
NTC20kΩ	20 kΩ at 25 °C
Accuracy	
PT1000	IEC751 Class B 0.3 K +0.5% • |t| (t in °C)
NTC20kΩ	0.3 K +1% • |t - 25 °C| (t in °C)
Sensitivity	
PT1000	≈ 3.85 Ω / K
NTC20kΩ	≈ -934.5 Ω / K at 25 °C (non-linear)
Response time	
with brass well	$\tau_{0.5}$ ≈ 18 s (with immersion well)
with stainless steel well	$\tau_{0.5}$ ≈ 30 s (with immersion well)
Electrical connection	
T7413A/VF20	terminals for 2 x 1.5 mm² cable
WPF20	terminals for 3 x 1.5 mm² cable
Ambient limits (housing)	
storage temperature	-35...+70 °C (-31...+158 °F)
Safety (terminal box)	
Protection standard	IP54 (T7413A) IP52 (VF20/WPF20)
Flame retardant	V1 as per UL94, Plastic (PC)
Dimensions	See page 3

® U.S. Registered Trademark
Copyright © 2006 Honeywell Inc. • All rights reserved

CE

Models

OS-no.	Sensor type	Sensing range	Length in mm (inches) L1	Length in mm (inches) T1	Immersion well
VF20T	NTC 20 kΩ	-25...+130 °C	185 (7.28)	152 (5.98)	VFHT
VF20L			338 (13.30)	305 (12.00)	VFL
VF20NT		-25...+150 °C	185 (7.28)	152 (5.98)	VFNT
VF20LN			338 (13.30)	305 (12.00)	VFLN
T7413A1009	PT1000	-25...+130 °C	193 (7.59)	160 (6.29)	VFHT
T7413A1041		-25...+150 °C*	185 (7.28)	152 (5.98)	not included
T7413A1058			338 (13.30)	305 (12.00)	
WPF20T	NTC 20 kΩ (two sensors)	-25...+130 °C	185 (7.28)	152 (5.98)	VFHT
WPF20L			338 (13.30)	305 (12.00)	VFL
*When a stainless steel immersion well is used.					

Immersion Well

Order-no.	Length mm (inch) T2	Immersion well	P_{max}	Max. flow rate
VFHT	135 (5.31)	brass, R1/2” / BSP1/2”, PN16	15 bar	8 m/s
VFL	300 (11.81)			3 m/s
VFNT	135 (5.31)	stainless steel, R1/2” / BSP1/2” PN25	25 bar	15 m/s
VFLN	300 (11.81)			6 m/s

DIMENSIONS

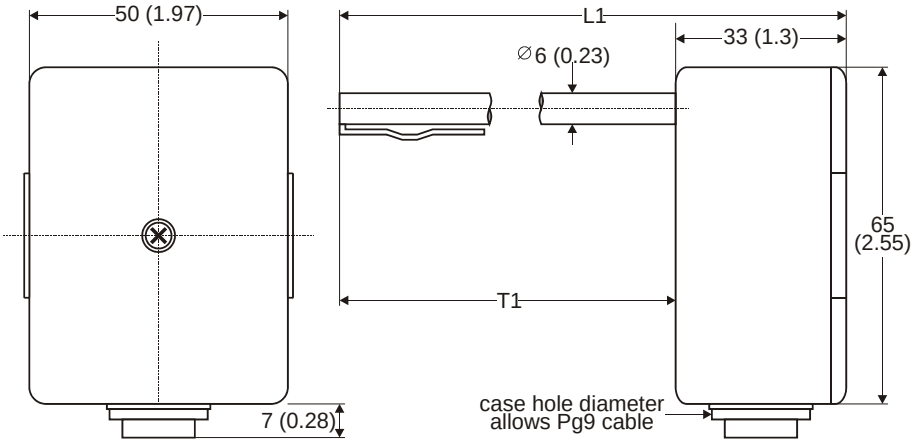

Fig. 1. Immersion temperature sensor, dimensions in mm (inches)

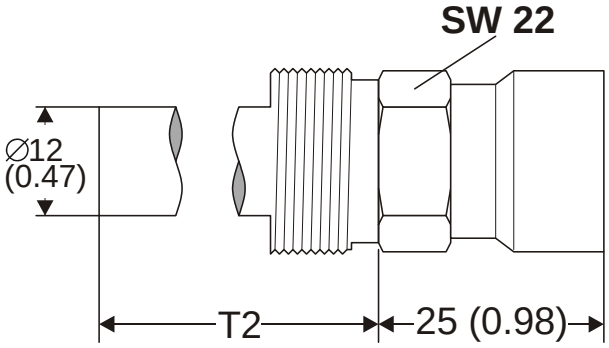

Fig. 2. Immersion wells, dimensions in mm (inches)

INSTALLATION

Wiring run	Maximum length
Sensor to controller	200 m (660 ft)

Offset due to wire resistance per 10 m of distance from sensor to controller, when using the T7413A (PT1000):

Type of wire	Temperature offset PT1000
0.5 mm^2 (AWG20)	0.18 °C (0.324 °F)
1.0 mm^2 (AWG17)	0.09 °C (0.162 °F)
1.5 mm^2 (AWG15)	0.06 °C (0.108 °F)

NOTE: Use shielded wiring in areas with high EMI. Keep 15 cm (5.9'') minimum distance between sensor lines and 230 Vac power lines.

ELECTRICAL CONNECTION

The wiring of the temperature sensor must be in accordance with the overall wiring circuit diagram.

The terminals are not polarized. Thus, connecting the wires in reverse will not result in any malfunction.

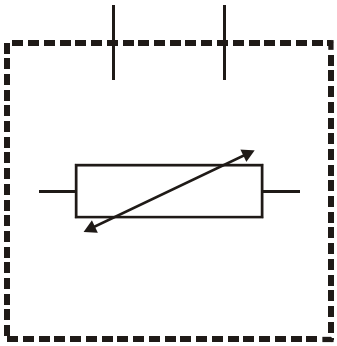

Fig. 3. T7413A, VF20 wiring

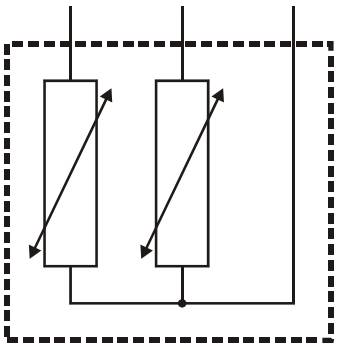

Fig. 4. WPF20 wiring

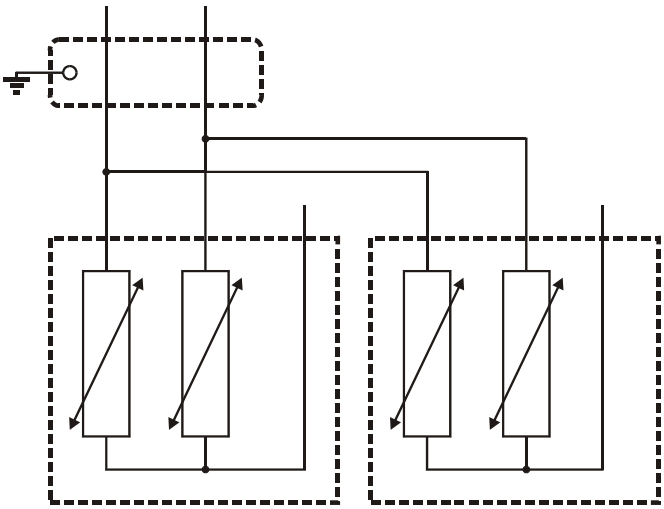

Fig. 5. Electrical connection establishing mean value with 2 x WPF20

Honeywell

Manufactured for and on behalf of the Environmental and Combustion Controls Division of Honeywell Technologies Sàrl, Ecublens, Route du Bois 37, Switzerland by its Authorized Representative:

Automation and Control Products
Honeywell GmbH
Böblinger Straβe 17
D-71101 Schönaich
Phone: (49) 7031 63701
Fax: (49) 7031 637493
http://europe.hbc.honeywell.com

Subject to change without notice. Printed in Germany

EN0B-0363GE51 R0206

DIN EN ISO
9001/14001